جامعة حفر الباطن
University of Hafr Al Batin

Lecture 8 - Unicast Routing Protocols

Objectives

- Autonomous Systems (ASs).
- Static versus Dynamic Routing Tables.
- Inter- and Intra-domain Routing.
- Routing Protocols:
  - Distance Vector Routing and RIP.
  - Link State Routing and OSPF.
  - Path Vector Routing and BGP.

Introduction

- An internet is a combination of networks connected by routers.
- When a datagram goes from a source to a destination, it will probably pass through many routers until it reaches the router attached to the destination network.

Static versus Dynamic Routing Tables

- A routing table can be either static or dynamic.
  - A *static table* is one with manual entries.
  - A *dynamic table* is one that is updated automatically when there is a change somewhere in the internet.
- Today, an internet needs dynamic routing tables. The tables need to be updated as soon as there is a change in the internet. For instance:
  - They need to be updated when a link is down.
  - They need to be updated whenever a better route has been found.

Routing Protocol

- Routing protocols have been created in response to the demand for dynamic routing tables.
- **A Routing protocol: is a combination of rules and procedures that lets routers in the internet inform each other of changes.**
- It allows routers to share whatever they know about the internet or their neighborhood.
  - The sharing of information allows a router in San Francisco to know about the failure of a network in Texas.
- The routing protocols also include procedures for combining information received from other routers.

Inter- and Intra-domain Routing

- Today, an internet can be so large that one routing protocol cannot handle the task of updating the routing tables of all routers.
- For this reason, an internet is divided into **autonomous systems**.
- **Autonomous System (AS):** is a group of networks and routers under the authority of a single administration.
  - Routing *inside* an autonomous system is called **intra-domain routing**.
  - Routing *between* autonomous systems is called **inter-domain routing**

Autonomous systems

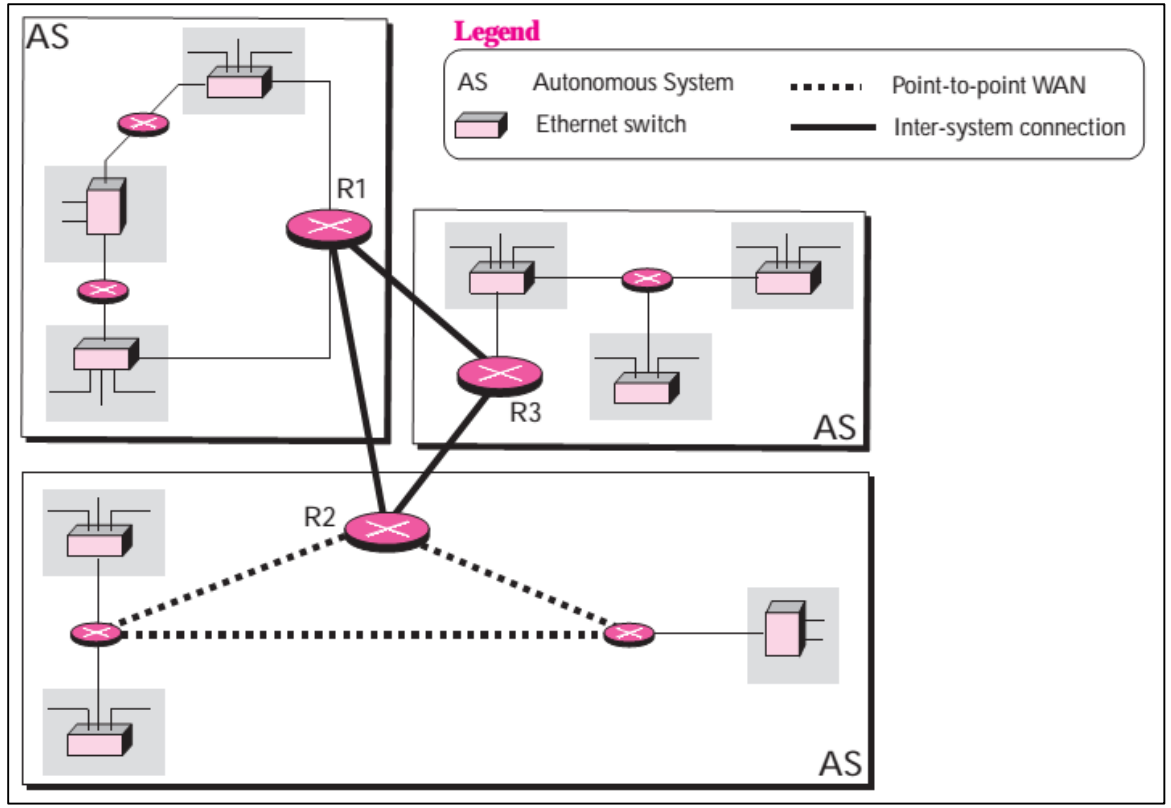

Popular Routing Protocols

- Several intra-domain and inter-domain routing protocols are in use. In this lecture, we cover only the most popular ones
  1. **Routing Information Protocol (RIP)** is the implementation of the distance vector protocol.
  2. **Open Shortest Path First (OSPF)** is the implementation of the link state protocol.
  3. **Border Gateway Protocol (BGP)** is the implementation of the path vector protocol.

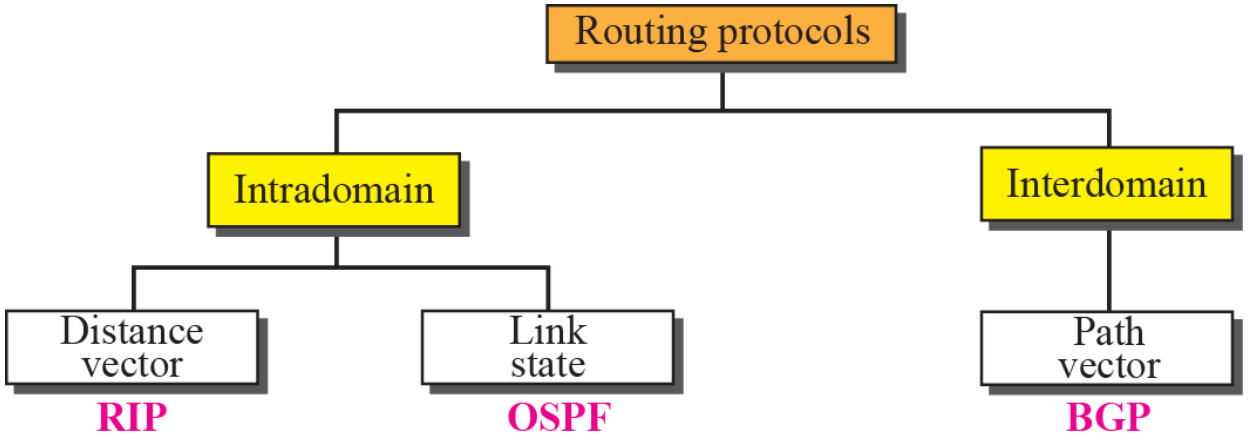

Distance Vector Routing

INTRA-DOMAIN ROUTING PROTOCOL

Distance Vector Routing

- Routers running distance vector algorithms **advertise the vector (path) and distance (metric or cost) for each destination** reachable within the network to adjacent (directly connected) router.
- This information is placed in a local database as it is received
- Then, *some algorithm* is used to **determine which path is the best path** to each reachable destination.
- Once the best path is determined, these **best paths are advertised** to each directly connected adjacent router.

Distance Vector Routing

- Two common algorithms used for determining the best path are:
  1. **Bellman-Ford Algorithm:**
     - used by the Routing Information Protocol (RIP and RIPv2).
  2. **Diffusing Update Algorithm (DUAL):**
     - used by the Enhanced Interior Gateway Protocol (EIGRP).

Distance Vector Routing

Bellman-Ford algorithm:

- The algorithm can be used in many applications in graph theory.
- If we know the **cost between each pair of nodes**, we can use the algorithm to **find the least cost (shortest path)** between any two nodes.
- For example:
  - if the nodes represent *cities* and the lines represent *roads* connecting them, the graph can find the shortest distance between any two cities.

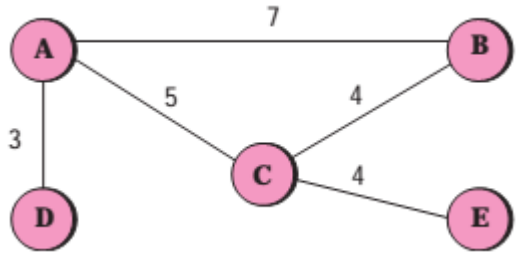

Distance Vector Routing

Bellman-Ford algorithm:

- The algorithm is based on the fact that:
  - if all neighbors of node *i* know the shortest distance to node *j*,
  - then the <u>*shortest distance between node i and j*</u> can be found by **adding** the distance between node *i* and each neighbor to the neighbor's shortest distance to node *j*
  - and then select the *minimum*.

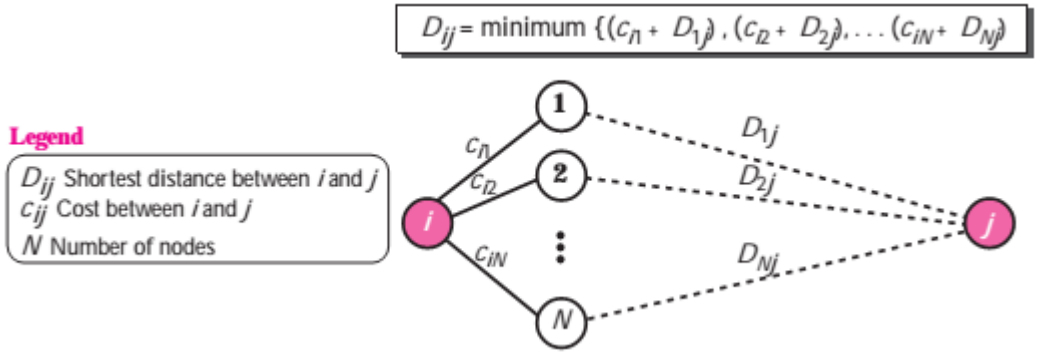

Distance Vector Routing

- If we want to use the **Bellman-Ford algorithm** for creating the routing table for routers in an AS, we need to change the algorithm
  1. In distance vector routing, the cost is hop counts.
     - how many networks are passed before reaching the destination.
     - The cost between any two neighbors is set to 1.
  2. Each router needs to update its routing table *asynchronously*, whenever it has received some information from its neighbors.
     - In other words, each router executes part of the whole algorithm in the Bellman-Ford algorithm. Processing is distributive.
  3. After a router has updated its routing table, it should send the result to its neighbors.
     - So that they can also update their routing table.
  4. Each router should keep at least three pieces of information for each route: destination network, the cost, and the next hop.
  5. We refer to information about each route received from a neighbor as R (record), which has only two pieces of information: R.dest and R.cost.
     - The next hop is not included in the received record because it is the source address of the sender.

Distance Vector Routing

- This figure shows the initial routing table for an AS.
- Note that the figure does *not* mean that all routing tables have been created at the same time.
- **Each router creates its own routing table when it is booted.**

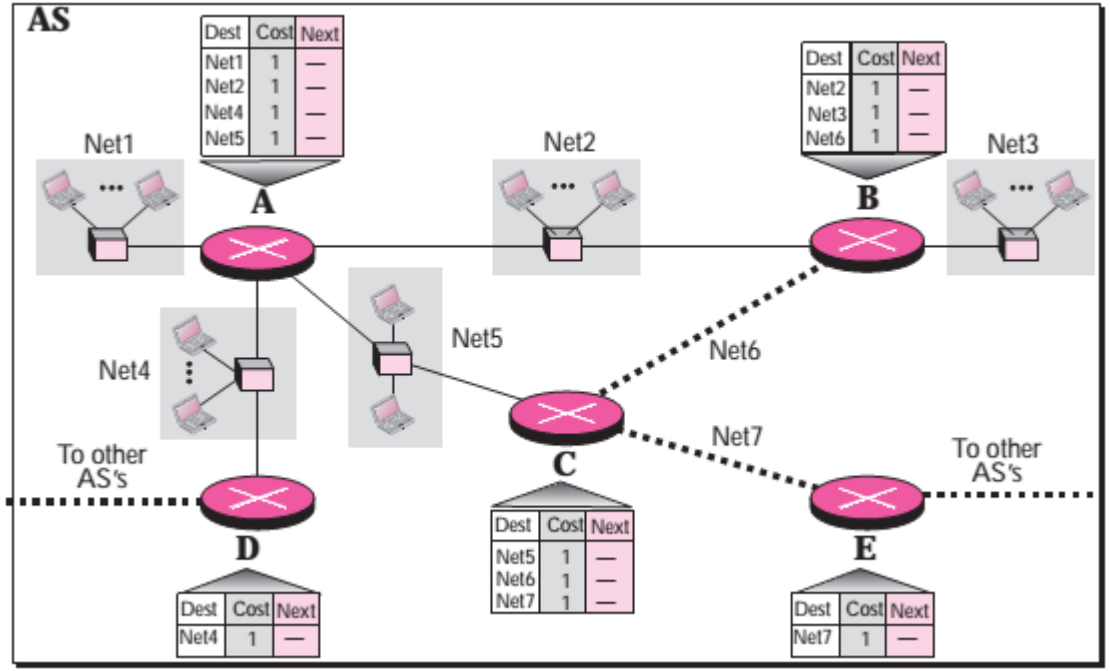

Distance Vector Routing

- Example:
  - Router A sends **four records** to its neighbors, routers B, D, and C.
  - This figure shows the changes in B's routing table when it receives these records.

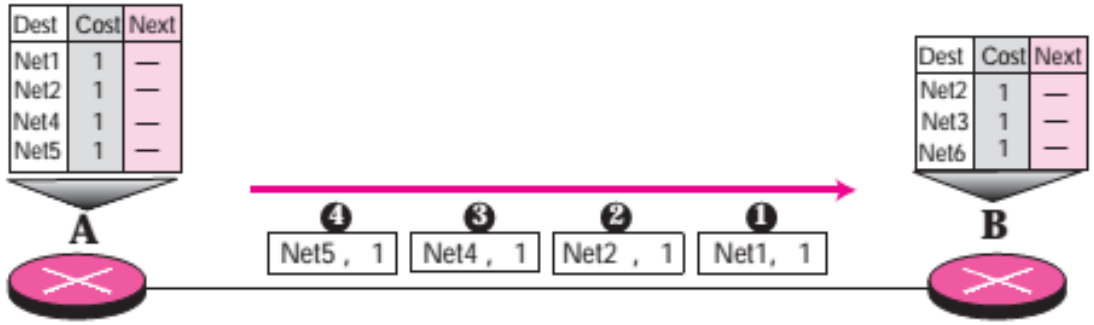

Routing Table B

Dest	Cost	Next
Net1	2	A
Net2	1	—
Net3	1	—
Net6	1	—

After receiving record 1

Routing Table B

Dest	Cost	Next
Net1	2	A
Net2	1	—
Net3	1	—
Net6	1	—

After receiving record 2

Routing Table B

Dest	Cost	Next
Net1	2	A
Net2	1	—
Net3	1	—
Net4	2	A
Net6	1	—

After receiving record 3

Routing Table B

Dest	Cost	Next
Net1	2	A
Net2	1	—
Net3	1	—
Net4	2	A
Net5	2	A
Net6	1	—

After receiving record 4

Routing Information Protocol (RIP)

BASED ON DISTANCE VECTOR ROUTING

Routing Information Protocol (RIP)

- The **Routing Information Protocol (RIP):** is an intra-domain (interior) routing protocol used inside an autonomous system.
- It is a very simple protocol based on **distance vector routing**.
- RIP implements distance vector routing directly with some considerations.

- **RIP uses the services of UDP on well-known port 520.**

RIP Message Format

- **Command (8 bits)**: the type of message: request (1) or response (2).
- **Version (8 bits):** the version of the RIP protocol: 1 or 2
- **Family (16 bits):** the family of the protocol used. For TCP/IP, value is 2.
- **Network address (14 bytes):** the address of the destination network.
  - RIP has allocated 14 bytes for this field to be applicable to any protocol.
  - However, IP currently uses only 4 bytes. The rest of the address is filled with 0s.
- **Distance (32 bits):** the hop count (cost) from the advertising router to the destination network.

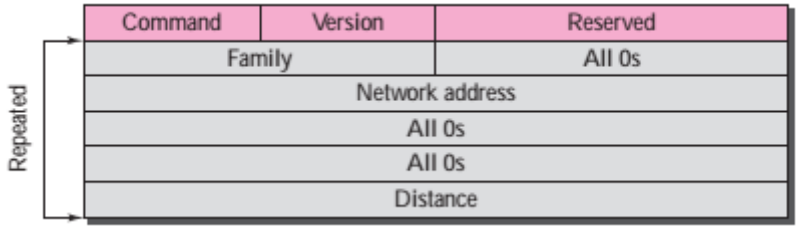

RIP Message Format: Requests and Responses

RIP has two types of messages:

1. **Request:**
   - A request message is sent:
     - By a router that has just come up. or
     - By a router that has some time-out entries
   - A request can ask about specific entries or all entries
2. **Response:**
   - A response can be either **solicited** or **unsolicited**.
     - A solicited response is sent only in answer to a request. It contains information about the destination specified in the corresponding request.
     - An unsolicited response is sent *periodically*:
       1. Every 30 seconds, or
       2. When there is a change in the routing table.

Timers in RIP

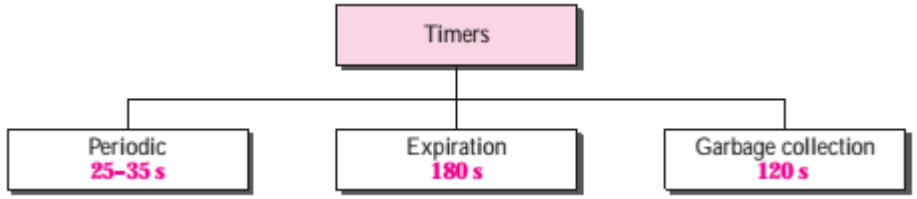

- RIP uses three timers to support its operation.

1. **Periodic Timer**:
   - controls the sending of regular update messages.
   - Each router has 1 periodic timer randomly set to a number between 25 and 30.
2. **Expiration Timer**:
   - governs the validity of a route.
   - The route is considered expired and the hop count of the route is set to 16, which means the destination is unreachable.
3. **Garbage Collection Timer**:
   - advertises the failure of a route.
   - when the information about a route becomes invalid, the router does not immediately purge that route from its table, until this timer expires.
   - This allows neighbors to become aware of the invalidity of a route prior to purging

Timers in RIP

Question:

- A routing table has 20 entries. It does not receive information about five routes for 200 s. How many timers are running in the router at this time?

Answer:

Periodic timer: 1

Expiration timer: 20 − 5 = 15

Garbage collection timer: 5

There are 21 timers running in the router.

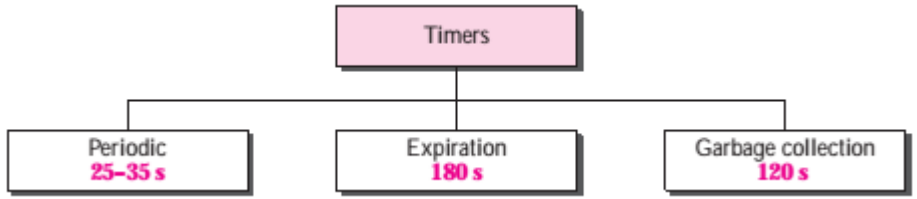

Link State Routing

INTRA-DOMAIN ROUTING PROTOCOL

Link State Routing

- Link state routing rely on each router in the network to advertise the state of each of their links to every other router within the local routing domain.
- The result is a complete network topology map, called a shortest path tree, compiled by each router in the network.
- As a router receives an advertisement, it will store this information in a local database, typically referred to as the link state database, and pass the information on to each of its adjacent peers.
  - This information is not processed or manipulated in any way before it is passed on to the router's adjacent peers.
  - The link state information is flooded through the routing domain unchanged, just as the originating router advertises it.

Link State Routing

- As each router builds a complete database of the link state information as advertised by every other router within the network, it uses an algorithm, called the ***shortest path first algorithm***, to build a tree with itself as the center of that tree.
- The shortest path to each reachable destination within the network is found by traversing the tree.
- The most common shortest path first algorithm is the ***Dijkstra algorithm***.

Link state knowledge

- Link state routing is based on the assumption that, although the global knowledge about the topology is not clear, **each node has partial knowledge about the topology**:
  - it knows the state (type, condition, and cost) of its links.
  - In other words, the whole topology can be compiled from the partial knowledge of each node.
  - For example, node A knows that it is connected to node B with metric 5, to node C with metric 2, and to node D with metric 3

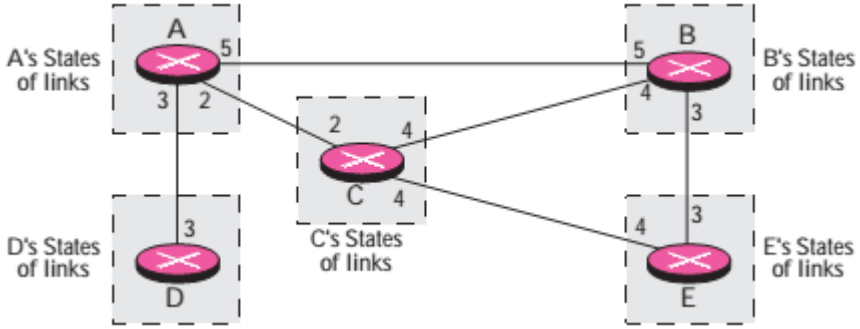

Building Routing Tables

In link state routing, **four sets of actions** are required to ensure that each node has the routing table showing the least-cost node to every other node:

1. **Creation of the states of the links** by each node.
   - called the link state packet or LSP.
2. **Dissemination of LSPs to every other router** in an efficient and reliable way.
   - called flooding,.
3. **Formation of a shortest path tree for each node**.
4. **Calculation of a routing table** based on the shortest path tree.

Creation of Link State Packet (LSP)

- A link state packet (LSP) can carry a large amount of information, like:
  - The node identity.
  - The list of links.
  - A sequence number.
  - An age.
- LSPs are **generated on two occasions:**
  1. When there is a change in the topology of the domain.
  2. On a periodic basis.
     - Normally 60 minutes or 2 hours.
     - There is no actual need for this type of LSP.

Dissemination of LSPs (Flooding)

- After a node has prepared an LSP, it must be disseminated to all other nodes, not only to its neighbors.
- The process is called ***flooding*** and based on the following:
  1. The creating node sends a copy of the LSP out of each interface.
  2. A node that receives an LSP compares it with the copy it may already have
     - If the newly arrived LSP is older than the one it has (found by checking the sequence number), it discards the LSP.
     - If it is newer, the node does the following:
       a. It discards the old LSP and keeps the new one.
       b. It sends a copy of it out of each interface except the one from which the packet arrived.

Formation of Shortest Path Tree: Dijkstra Algorithm

- After receiving all LSPs, each node will have a copy of the whole topology.
- However, the topology is not sufficient to find the shortest path to every other node
  - a shortest path tree is needed.

Formation of Shortest Path Tree: Dijkstra Algorithm

- **Example:** shortest path three for *router A* in a graph.

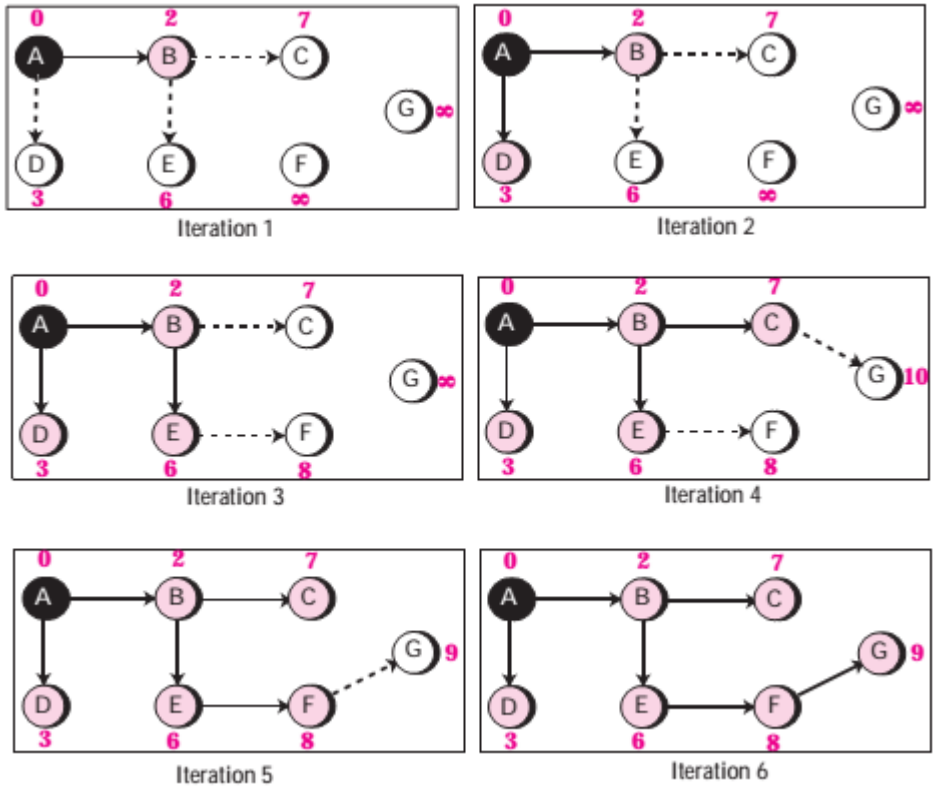

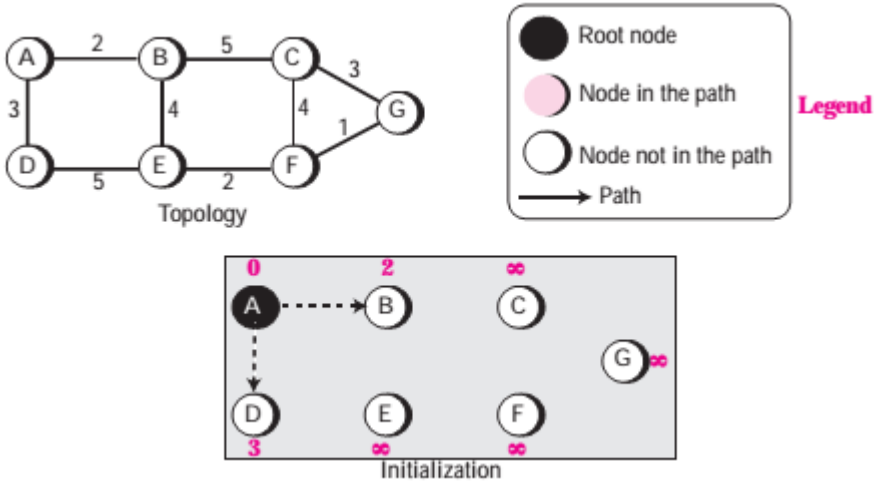

Formation of Shortest Path Tree: Dijkstra Algorithm

- **Another Example:**
- To show that the shortest path tree for each node is *different*, you can find the shortest path tree <u>as seen by node C</u>.
- You should get the following tree:

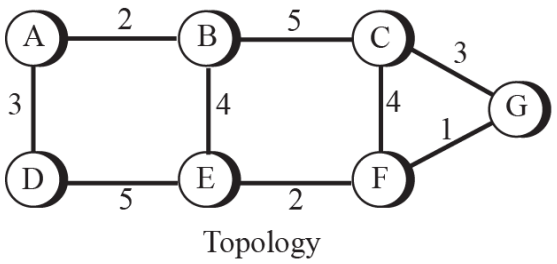

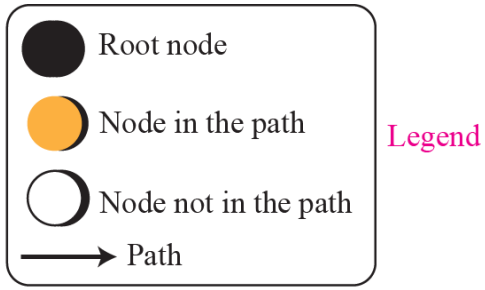

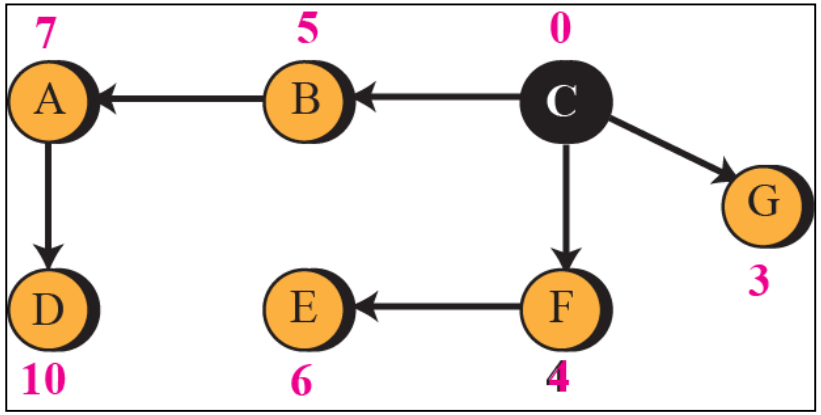

Calculation of Routing Table from Shortest Path Tree

- Each node uses the shortest path tree found in the previous step to construct its routing table.

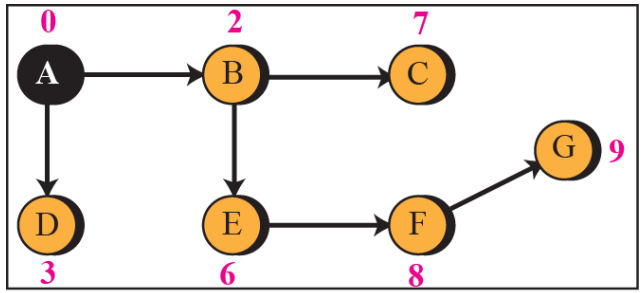

Iteration 6

Table 11.4 *Routing Table for Node A*

Destination	*Cost*	*Next Router*
A	0	—
B	2	—
C	7	B
D	3	—
E	6	B
F	8	B
G	9	B

Open Shortest Path First (OSPF) Protocol

BASED ON LINK STATE ROUTING

Open Shortest Path First (OSPF) Protocol

- The Open Shortest Path First (OSPF) protocol: is an intra-domain routing protocol based on link state routing. Its domain is also an autonomous system.

- **OSPF packets are encapsulated in IP datagrams.**

Area in OSPF

- To handle routing efficiently and in a timely manner, OSPF divides an autonomous system into areas.
- An **Area** is a collection of networks, hosts, and routers all contained within an autonomous system.
- An autonomous system can be divided into many different areas. All networks inside an area must be connected.

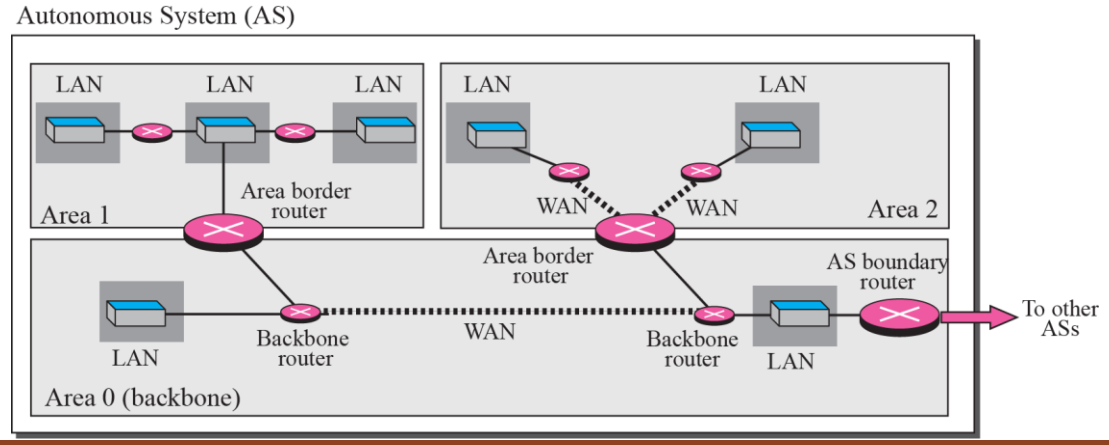

Area in OSPF

- Routers inside an area flood the area with routing information.
- At the border of an area, special routers called **area border routers.**
  - They summarize the information about the area and send it to other areas.
- Among the areas inside an autonomous system is a special area called **the backbone**
  - all of the areas inside an autonomous system must be connected to the backbone.
  - routers inside the backbone are called the **backbone routers**.
  - note that a **backbone router can also be an area border route**.
- Each area has an **area identification**.
  - The area identification of the backbone is ***zero***.

Area in OSPF

- **Virtual link:**
  - If, because of some problem, the connectivity between a backbone and an area is broken, a **virtual link** between routers must be created by the administration to allow continuity of the functions of the backbone as the primary area.

Metric in OSPF

- The OSPF protocol allows the **administrator** to assign a cost, called the **metric**, to each route.
- The metric can be based on a type of service (minimum delay, maximum throughput, and so on).

Types of Links in OSPF

- In OSPF terminology, **a connection is called a link**.
- Four types of links have been defined:
  1. **point-to-point**: connects two routers without any other host or router in between.
  2. **Transient**: is a network with several routers attached to it.
  3. **Stub**: is a network that is connected to only one router
  4. **Virtual**: created by an administrator when the link between two routers is broken.

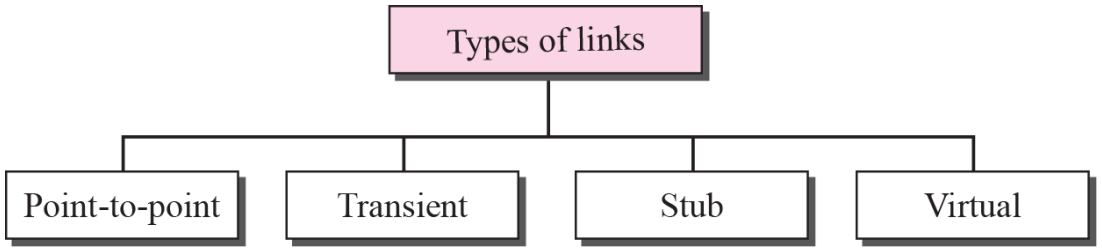

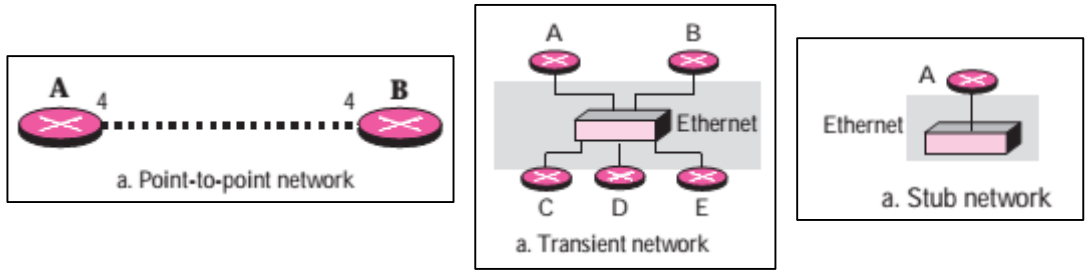

Graphical Representation of an AS in OSPF

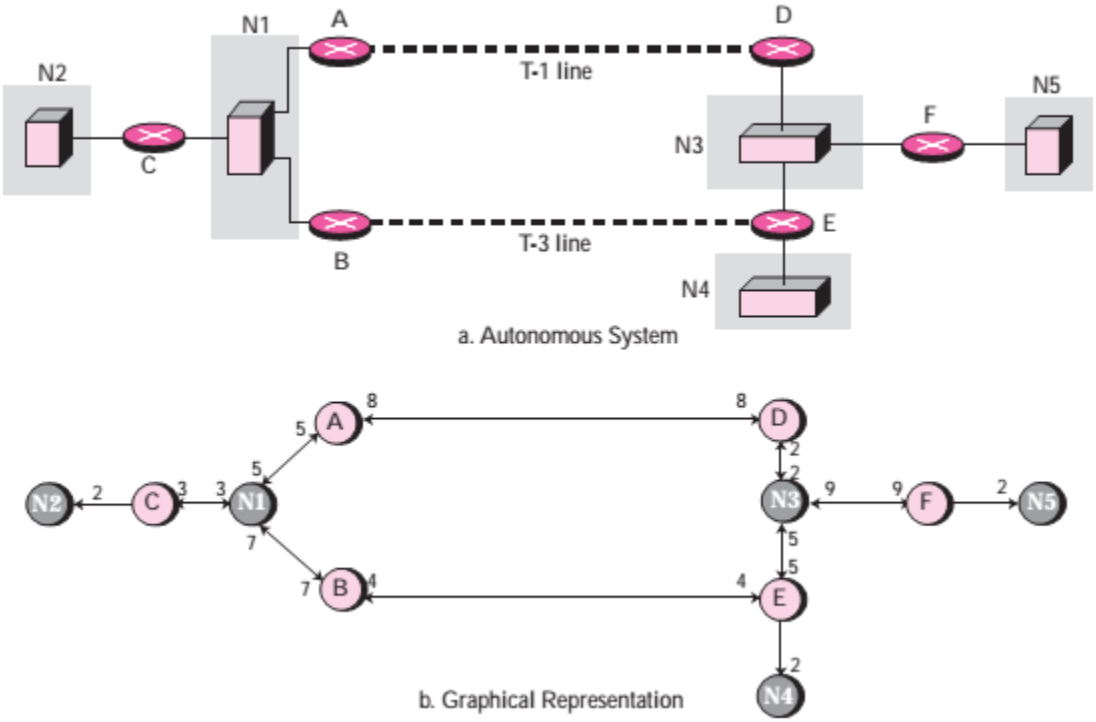

OSPF Packet

- **There are different types of OSPF packets.**
- All OSPF packets have the same **common header**:
  - **Source router IP address**: the IP address of the router that sends the packet.
  - **Area identification**: the area within which the routing takes place.
  - **Checksum**: used for error detection.
  - **Authentication type**: the authentication protocol used in this area:
    - 0 for none and 1 for password.
  - **Authentication**: the actual value of the authentication data.

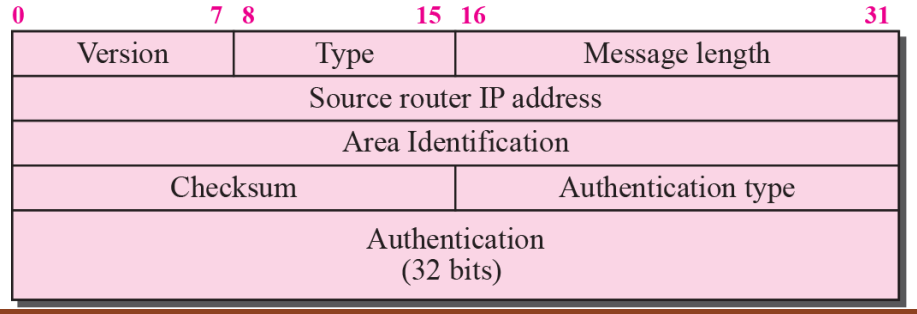

Types of OSPF packet

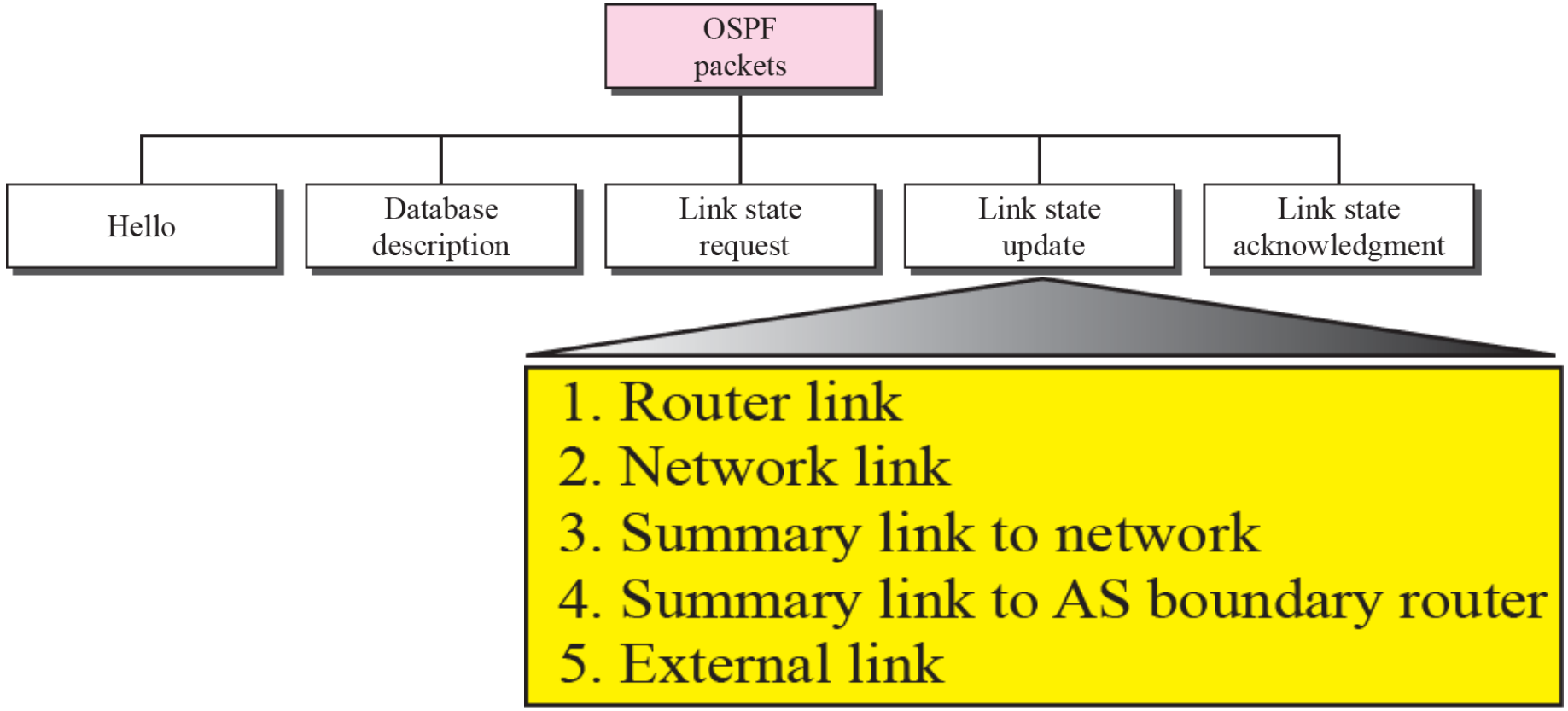

Link State Update Packet

- Link State Update Packet is the heart of the OSPF operation.
- **It is used by a router to advertise the states of its links**.
- The link state advertisement has a **Link State ID**, and its value is based on the type of link state update packet.

Link state type	**Link state ID**
Router link	IP address of the router
Network link	IP address of the designated router
Summary link to network	Address of the network
Summary link to AS boundary	IP address of the boundary router
External link	Address of the network

Distance Vector vs. Link State

- Comparison of Distance Vector and Link State routing.

Feature	Distance Vector	Link State
Topology	Doesn’t know Network Topology	Knows entire Network Topology
Path Calculation	Hop Count	Shortest Path
Configuration	Easy	Difficult
Metric	Hop Count	Link Cost
Algorithm	Bellman-Ford Algorithm	Dijkstra Algorithm
Example Protocol	RIP	OSPF

Path Vector Routing

INTER-DOMAIN ROUTING PROTOCOL

Path Vector Routing

- **Distance Vector** and **Link State** routing are both **interior routing protocols**.
  - They can be used ***inside*** *an autonomous system* as intra-domain or intra-AS (as sometimes are called), but ***not between autonomous systems***.
- Both of these routing protocols become **difficult to manage** when the domain of operation becomes large:
  - Distance vector routing is subject to instability if there is more than a few hops in the domain of operation.
  - Link state routing needs a huge amount of resources to calculate routing tables. It also creates heavy traffic because of flooding.
- There is a need for a third routing protocol which we call **Path Vector Routing**.

Path Vector Routing

- **Path Vector Routing Protocol**: is an exterior routing protocol which maintains the path information that gets updated dynamically

- The difference between the distance vector routing and path vector routing can be compared to the difference between a national map and an international map.
  - A national map can tell us the road to each city and the distance to be traveled if we choose a particular route.
  - An international map can tell us which cities exist in each country and which countries should be passed before reaching that city.

Path Vector Routing

- **Distance Vector vs. Path Vector Routing:**

Attributes	Distance Vector Routing	Path Vector Routing
What the router has	a list of networks that can be reached in the same AS with the corresponding cost (number of hops)	list of networks that can be reached with the path (list of ASs to pass) to reach each one
Domain of operation	A single AS	Between ASs (the whole Internet)
What is shared	The distance to each network	The path

Path Vector Reachability

- To be able to provide information to other ASs, each AS must have at least one path vector routing that **collects reachability information about each network in that AS.**
  - In other words, the AS needs to **have a list of existing networks in its territory.**

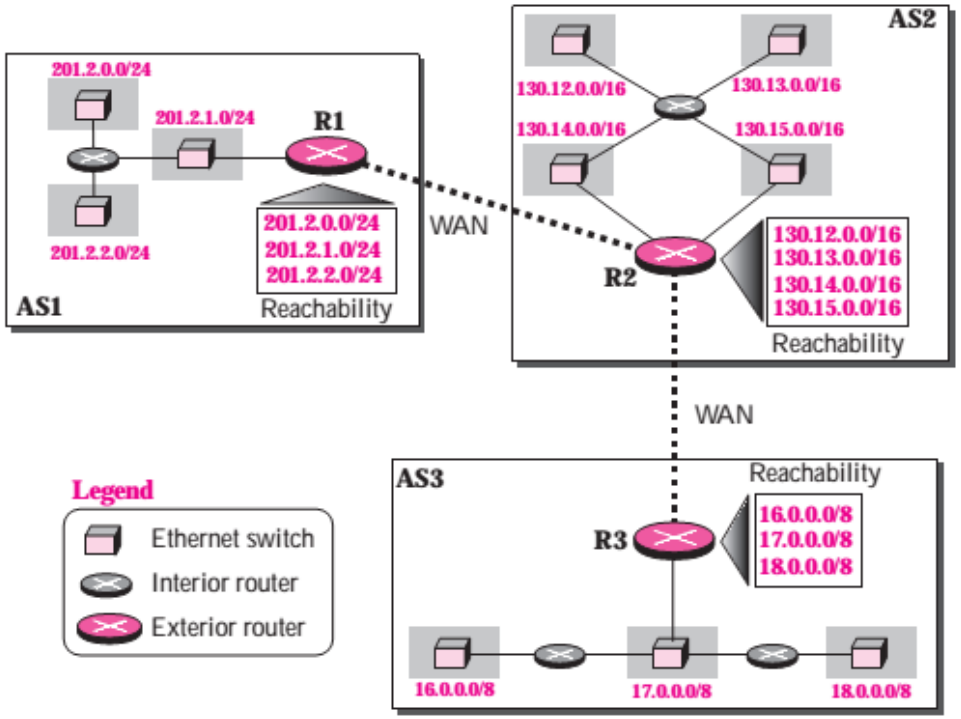

Path Vector Routing Table

- A path vector routing table for each router can be created if ASs share their reachability list with each other.
  - Router R1 in AS1 can send its reachability list to router R2.
  - Router R2, after combining its reachability list, can send the result to both R1 and R3.
  - Router R3 can send its reachability list to R2, which in turn improves its routing table.
  - And so on..

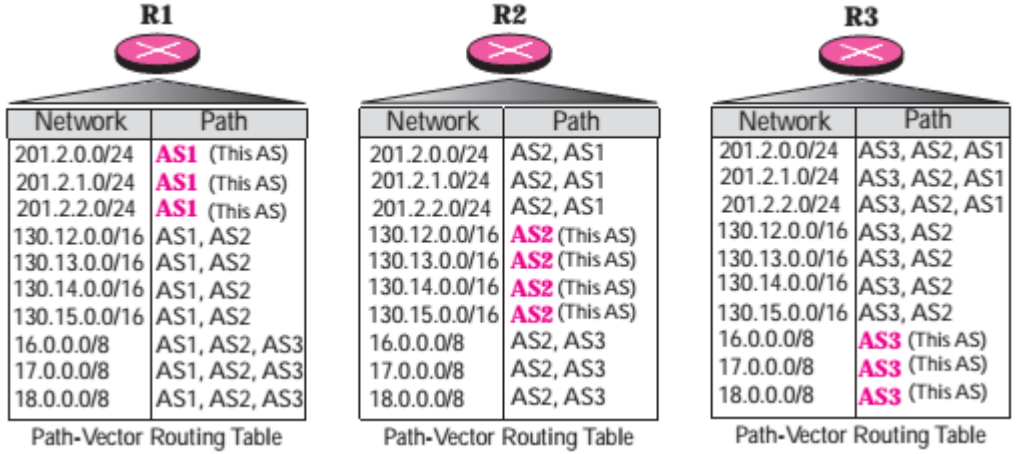

Network	Path
201.2.0.0/24	AS1 (This AS)
201.2.1.0/24	AS1 (This AS)
201.2.2.0/24	AS1 (This AS)
130.12.0.0/16	AS1, AS2
130.13.0.0/16	AS1, AS2
130.14.0.0/16	AS1, AS2
130.15.0.0/16	AS1, AS2
16.0.0.0/8	AS1, AS2, AS3
17.0.0.0/8	AS1, AS2, AS3
18.0.0.0/8	AS1, AS2, AS3

Path-Vector Routing Table

Network	Path
201.2.0.0/24	AS2, AS1
201.2.1.0/24	AS2, AS1
201.2.2.0/24	AS2, AS1
130.12.0.0/16	AS2 (This AS)
130.13.0.0/16	AS2 (This AS)
130.14.0.0/16	AS2 (This AS)
130.15.0.0/16	AS2 (This AS)
16.0.0.0/8	AS2, AS3
17.0.0.0/8	AS2, AS3
18.0.0.0/8	AS2, AS3

Path-Vector Routing Table

Network	Path
201.2.0.0/24	AS3, AS2, AS1
201.2.1.0/24	AS3, AS2, AS1
201.2.2.0/24	AS3, AS2, AS1
130.12.0.0/16	AS3, AS2
130.13.0.0/16	AS3, AS2
130.14.0.0/16	AS3, AS2
130.15.0.0/16	AS3, AS2
16.0.0.0/8	AS3 (This AS)
17.0.0.0/8	AS3 (This AS)
18.0.0.0/8	AS3 (This AS)

Path-Vector Routing Table

Routing table for each router after all three routers have updated their routing table.

Path Vector Routing Aggregation

- The path vector routing protocols normally support CIDR notation and the aggregation of addresses (if possible). The **benefits** are:
  - It helps to make the path vector routing table simpler.
  - The exchange between routers becomes faster.

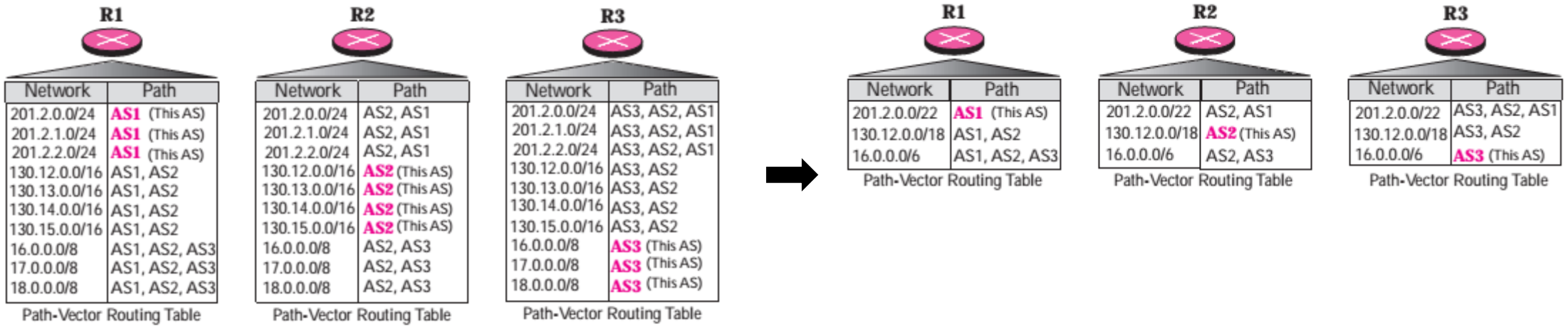

Border Gateway Protocol (BGP)

BASED ON PATH VECTOR ROUTING

Border Gateway Protocol (BGP)

- Border Gateway Protocol (BGP) is an interdomain routing protocol using path vector routing.
- It first appeared in 1989 and has gone through four versions.

BGP: Types of Autonomous Systems

- We can divide autonomous systems into three categories:

1. **Stub AS:**
   - Has only one connection to another AS.
   - Data traffic cannot pass through a stub AS (it is wither a source or a sink).
   - Example: small corporation or a small local ISP.
2. **Multihomed AS:**
   - Has more than one connection to other ASs.
   - But it is still only a source or sink for data traffic (it can send traffic and receive traffic, but there is no transient traffic).
   - Example: large corporation that is connected to more than one AS.
3. **Transit AS:**
   - A multihomed AS that also allows transient traffic.
   - Example: national and international ISPs (Internet backbones).

BGP Sessions

- The exchange of routing information between two routers using BGP takes place in a session.
- A **BGB session:** is a connection that is established between two BGP routers only for the sake of exchanging routing information.
- To create a reliable environment, BGP uses the services of TCP on port 179.
- **BGP can have two types of sessions:**
  1. External BGP (E-BGP) sessions.
  2. Internal BGP (I-BGP) sessions.

BGP Sessions

1. External BGP (E-BGP) Sessions:

- Used to exchange information between two speaker nodes belonging to two different autonomous systems.

2. Internal BGP (I-BGP) Sessions:

- Used to exchange routing information between two routers inside an autonomous system.

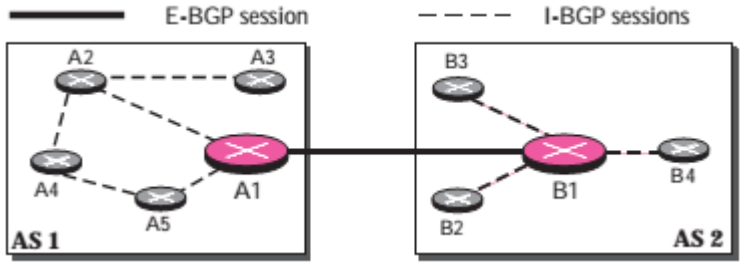

BGP Packets

- BGP uses four different types of messages:
  1. **Open message**: to opens a TCP connection with a neighbor.
  2. **Update message**: to announce a route to a new destination, or withdraw destinations that have been advertised previously, or both.
  3. **Keepalive Message**: to tell each other that they are alive.
  4. **Notification Message**: is sent whenever an error condition is detected or a router wants to close the connection

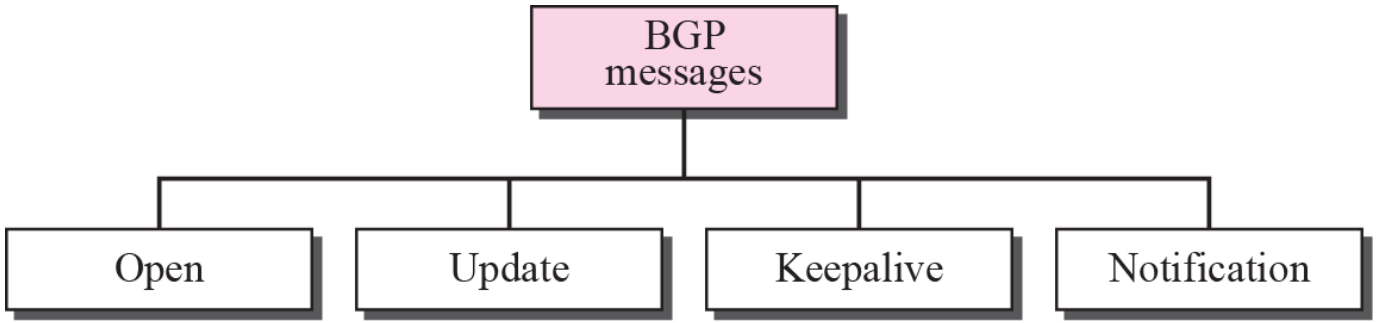

BGP Packets

- All BGP packets share the same common header:
  1. **Marker**: reserved for authentication.
  2. **Length**: the length of the total message including the header.
  3. **Type**: the type of the packet (1 - 4 for the four types).

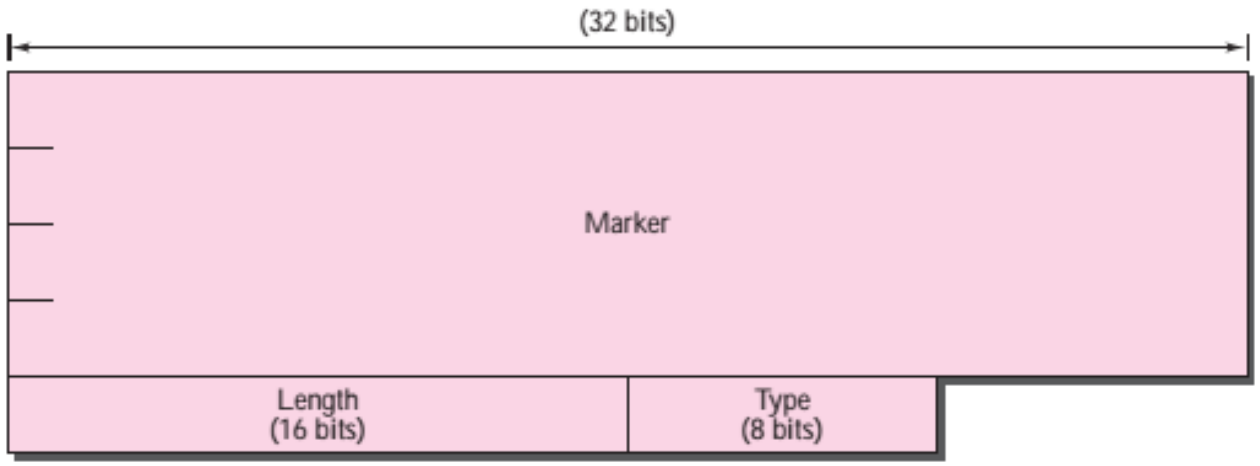

BGP Encapsulation

- BGP messages are encapsulated in TCP segments using the well-known port 179.
- This means that **there is no need for error control and flow control**.
- When a TCP connection is opened, the exchange of update, keepalive, and notification messages is continued until a notification message to close the connection is sent.